INSTRUCTION MANUAL

STATION CONTROLLER SC2000

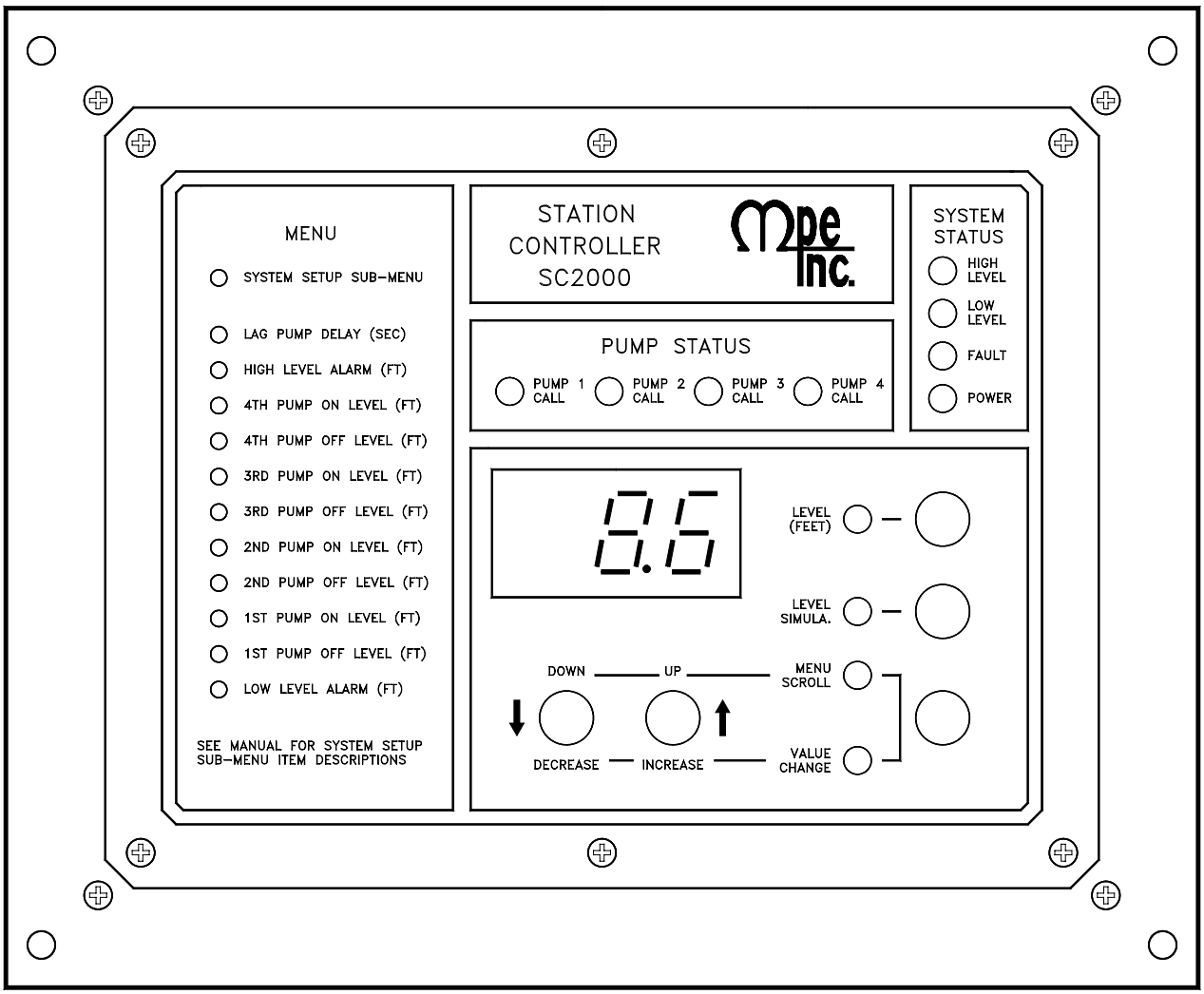

MOTOR PROTECTION ELECTRONICS, INC.

2464 Vulcan Road, Apopka, Florida 32703
Phone: (407) 299-3825 Fax: (407) 294-9435

Revision Date: 9-16-08
Covers Units with Serial Numbers 634 and Lower with Operating Program Revision (oPr) Number: 7

STATION CONTROLLER SC2000

Applications:

- Simplex, Duplex, Triplex, or Quadraplex
- Fixed or Variable Speed Control
- Pump Down (Empty a Tank) or Pump Up (Fill a Tank)

Standard Features:

- All Setup Parameters Values may be viewed or changed from the front of the unit
- Phoenix style connectors used
- Analog Level Input [4-20mA], Transient Protected
- 20VDC power for analog Level Input Loop
- 6 Amp Pump Call Relay outputs
- RS-232 Serial Port, Modbus RTU Protocol
- Wet Well Level Analog Input Zero and Span Adjustments
- High and Low Level Alarm Relays and Alarm Indication
- Adjustable Lag Pump(s) Delay
- Alternation Schemes – Menu Selectable:
  - Standard Alternation
  - Pump 1 Always Lead – Stays On with other Pumps
  - Pump 1 Always Lead – Turns Off with other Pumps On
  - Split Alternation – Pumps 1&2, and Pumps 3&4
  - Fixed Sequence – Pump 1 Always Lead
  - Stepped On/Off – Only One Pump Runs at a Time

  Alternator Logic Skips Disabled Pumps
  Remembers Lead Pump Position during Power Outage
- First On - **First** Off or First On - **Last** Off Alternation
- Timed [1 minute] Level Simulation
- Security Code Protected Parameter Setup
- 18 Discrete Inputs that can be programmed for the following functions:
  - Pump disable with HOA in OFF, or pump fault
  - External Alternator Selector Switch
  - All pump disable – for connection to Phase Monitor
  - Limit number of pumps called while on emergency power
  - Alternation by External Time Clock
  - Freeze wet well level during a bubbler tube purge
  - Call pump last
  - Float switch backup
  - Low Level Pump Cutoff
  - Bubbler System fault
  - A variety of telemetry functions
- Status of Discrete Inputs may be viewed from front of controller

Variable Frequency Drive Control:

- VFD Speed Reference – The Controller must be ordered with an Analog Output for speed control of each pump that will be on a VFD.
- Three setup parameters are provided to establish a Linear Wet Well Level versus Pump Speed Curve.
- Pump Speed Clamp Logic – Will Not allow the VFD Speed Reference to drop below the "VFD Minimum Speed" setup parameter value.
- Pump Start Speed Boost Logic – If enabled, will temporally ramp the Pump Speed Reference to 100%, to give the Check Valve a chance to open.
- Call Pump Last Logic – The Controller will call pumps in the Bypass Mode Last. (External circuitry must be connected to Discrete Inputs on the Controller, to signal when a pump is in the Bypass Mode.)

Analog Output Option:

- Up to four Isolated 4-20mA Analog Outputs may be ordered and used for VFD speed control or for telemetry.

Auxiliary Input Option:

- Up to four Isolated 4-20mA Auxiliary Analog Inputs may be ordered and used for telemetry.
- Data may be read through the Serial Port.

Specifications:

- Input Power: 120 VAC ±10%, 13 VA max
- External Dimensions: 6.9" x 8.5" x 4.9"
- Agency Approvals: UL 508, CAN/CSA
- Ambient Operating Temperature:
  Without Analog Outputs:
  –20°C to +65°C (–4°F to +149°F)
  With Analog Outputs:
  –20°C to +50°C (–4°F to +122°F)
- Level Display: 3 Digit, 7 Segment LED
- Level Display Range: 0 – 255 feet
  (Decimal Point Position is Selectable)
- Indicators: LED
- Color: White with Blue Lettering
- Relays: 6A @ 250VAC
- Level Analog Input: 4 – 20mA, 250Ω Load, Transient Protected
- Discrete Inputs: 24VDC, Transient Protected
- Power for Discrete Inputs: Unregulated 24VDC, Transient Protected
- Power for Analog Input: Regulated 20VDC ±1V, Transient Protected
- Analog Outputs: Isolated 4 – 20mA
  Maximum Load Resistance: 600Ω
  Each Output may be configured as the Speed Reference for any of the Pumps, or set to follow the Wet Well Level input
- Auxiliary Analog Inputs: Isolated 4 – 20mA, 250Ω Load, Transient Protected

Ordering Information:

Part Number: SC2000 – X X

Number of Optional Analog Outputs:

0 = Zero Analog Outputs
1 = One Analog Output
2 = Two Analog Outputs
3 = Three Analog Outputs
4 = Four Analog Outputs

Number of Optional Auxiliary Analog Inputs:

0 = Zero Auxiliary Analog Inputs
1 = One Auxiliary Analog Input
2 = Two Auxiliary Analog Inputs
3 = Three Auxiliary Analog Inputs
4 = Four Auxiliary Analog Inputs

OPERATOR INTERFACE FUNCTIONS:

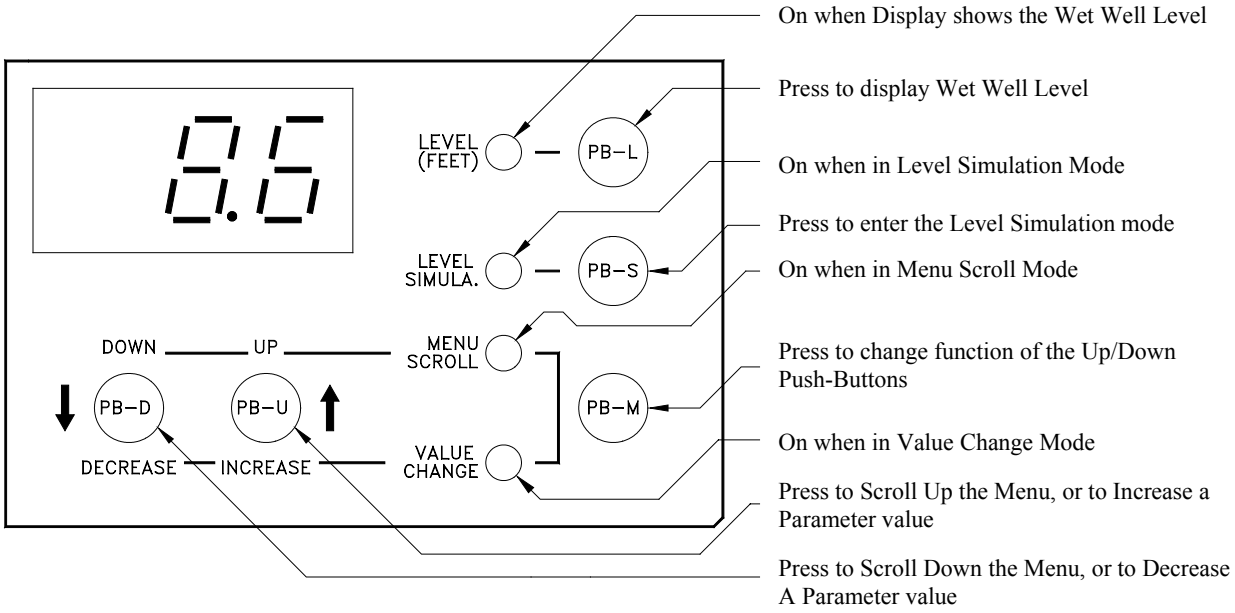

Note: There is a 4 second delay on changing parameter values.

How to View a Setup Parameter Value:

1. Press push-button PB-M until the Menu Scroll Mode indicator comes on.
2. Press push-button PB-D and PB-U as needed to arrive at the parameter you wish to view.

Parameters in the Main Menu:
The value of a parameter in the Main Menu is displayed whenever the indicator next to the parameter label is on.

Parameters in the System Setup Sub-Menu:
The value of a parameter in the System Setup Sub-Menu may be viewed by using the push-button PB-M to toggle from the parameter number (P.13, for example) to the parameter value.

How to Change a Setup Parameter Value:

1. Press push-button PB-M until the Menu Scroll mode indicator comes on.
2. Press push-button PB-D and PB-U as needed to arrive at the parameter you wish to change.

Parameters in the Main Menu:
Press push-button PB-M until the Value Change indicator comes on.

Parameters in the System Setup Sub-Menu:
Press push-button PB-M until the Value Change indicator comes on. The current value of the parameter will then be displayed.

3. Press and hold for 4 seconds, either push-button PB-D or PB-U, to change the parameter to the desired new value. (If the parameter value will not change the parameters may be locked. See directions below to un-lock parameters.)
4. Press push-button PB-M or PB-L to exit the Value Change mode.

How to do Level Simulation:

1. Press push-button PB-S. (The Simulation starts from the actual level displayed prior to entering the Level Simulation mode.)
2. Press push-button PB-D or PB-U as needed to change the simulated level.
3. To end the level simulation press push-button PB-L. (If you do not exit the Level Simulation mode, normal operation will resume automatically 60 seconds after the last time the Up/Down push-buttons were pressed.)

How to Enter the Security Code:

1. Press the push-button PB-M until the Menu Scroll mode indicator comes on.
2. Press push-button PB-U until the display reads SEC.
3. Press push-button PB-M to change to the Value Change mode.
4. Press and hold for 4 seconds, either push-button PB-D or PB-U, to change the value displayed, to that of the correct security code.

MENU - SYSTEM SETUP

oPr – Operating Program Revision Number

Parameter Number	Default Value	Current Value	Description of Parameter
-	2.0 feet		Low Level Alarm
-	3.0 feet		1ST Pump Off Level
-	6.0 feet		1ST Pump On Level
-	4.0 feet		2ND Pump Off Level
-	7.0 feet		2ND Pump On Level
-	4.5 feet		3RD Pump Off Level
-	8.0 feet		3RD Pump On Level
-	5.0 feet		4TH Pump Off Level
-	9.0 feet		4TH Pump On Level
-	10.0 feet		High Level Alarm
-	5 sec		Lag Pump Delay
SEC	0		Security Code – Enter Your Security Code Here to Allow Parameters to be Changed. Change to other Number to Re-lock All Parameters. (Also See Parameter P.26)
P.13	4		Number of Pumps Present 1 = 1 Pump 2 = 2 Pumps 3 = 3 Pumps 4 = 4 Pumps
P.14	4		Number of Pumps Allowed to Run At the Same Time 1 = 1 Pump 2 = 2 Pumps 3 = 3 Pumps 4 = 4 Pumps
P.15	4		Number of Pumps Allowed to Run On Generator 1 = 1 Pump 2 = 2 Pumps 3 = 3 Pumps 4 = 4 Pumps Must Connect Auto Transfer Switch to Discrete Input Programmed for this Function.
P.16	1		Alternator Sequence Mode 1 = Standard Alternation 2 = Pump 1 Always Lead – Stays On With Other Pumps 3 = Pump 1 Always Lead – Turns Off With Other Pumps 4 = Split Alternation – Pumps 1&2, and Pumps 3&4 5 = Fixed Sequence – Pump 1 Always Lead 6 = Stepped On/Off – Only One Pump Runs at a Time
P.17	2		Pump Stop Mode 1 = First On Last Off 2 = First On First Off
P.18	1		Automatic Alternation 1 = Enabled 2 = Disabled (Also see Parameter P.39)
P.19	1		Pump Up or Down Mode 1 = Pump Down – Empty a Tank 2 = Pump Up – Fill a Tank (When changing to P.19 = 2, Pump ON & OFF Levels and Level at Min. Speed (P.21) and Level at 100% Speed (P.22) must be switch around to make Fault LED go out.)
P.20	50 %		VFD Minimum Speed (Percent of Full Speed), (Range: 38% – 95%)
P.21	3.5 feet		Level at Minimum Speed
P.22	6.0 feet		Level at 100% Speed
P.23	0 sec		Pump Start Speed Boost Time (Set for 0 seconds to Disable Feature)
P.24	11.5 feet		Level Input Span (Value with 20.0mA Input), (Range: 0.25 feet – 255 feet)
P.25	0.0 feet		Level Input Zero (Value with 4.0mA Input)
P.26	0		Security Code Setup Parameter – Establishes What Value Will Be Accepted as the Security Code. To Change Parameter P.26, the Current Security Code Must First be Entered into Parameter SEC. Parameter P.26 Accepts Values in the range of 0 – 255. When You Change Parameter P.26 and Exit the Value Change Mode Parameter P.26 Will No Longer Be Viewable, Until You Enter the New Security Code into SEC. **** If You Forget Your Security Code, Consult Factory for Master Security Code. ****
P.27	1		Serial Port - Protocol 1 = Modbus RTU Mode
P.28	1		Serial Port - Slave Address (Range: 1 – 247)
P.29	4		Serial Port - Baud Rate 1 = 1200 bps 2 = 2400 bps 3 = 4800 bps 4 = 9600 bps
P.30	0		Serial Port - Parity Mode 0 = No Parity 1 = Odd Parity 2 = Even Parity
P.31	2		Serial Port - Stop Bits 1 = 1 Stop Bit 2 = 2 Stop Bits (The 2nd Stop Bit is available only when No Parity is selected on Parameter P.30)
P.32	3 ms		Serial Port - Delay Transmitting Response (Range: 1 - 100 ms) (oPr = 7 and Above)
P.33	0		Serial Port – Remote Telemetry Register Access Mode (oPr = 7 and Above) 1 = Read & Write 2 = Read Only
P.34	-		Spare Parameter
P.35	1 sec		Stop Pump Delay - Time period that the wet well level must remain at or below (at or above for Pump Up P.19 = 2) the respective OFF level setting in order to turn off a pump.
P.36	1		Display Decimal Point Position From Right Side (Where 0 = No Decimal Point)
P.37	1 min		Pump Re-enable Delay after Float Backup Low Level - Delay starts when float opens. (For Pump Up Applications (P.19 = 2), this Delay Operates Using the High Level Float.)
P.38	1 min		Delay Canceling Remote Pump Control Commands, After Loss of Serial Communication
P.39	0		Forced Lead Pump Position 1(2,3,4) = Pump 1(2,3,4) as Lead, 0 = Normal Alternation
FLC	-	-	Fault Code Display (See Fault Code Table for Fault Description.)

MENU - I / O SETUP

Parameter Number	Default Value	Current Value	Description of Parameter	
F.01	1		Discrete Input 1 Function	**Function of Input:** **Connect To:** 0 = General Purpose Telemetry ……..…….. Telemetry Contact 1 = Pump 1 Disable …….……...….. HOA and Fault Conditions 2 = Pump 2 Disable …….……...….. HOA and Fault Conditions 3 = Pump 3 Disable …….…...…….. HOA and Fault Conditions 4 = Pump 4 Disable …….……...…….. HOA and Fault Conditions 5 = Level Freeze ……...…. Bubbler Tube Purge Logic 6 = External Alternation (see P.18) ...……. External Time Clock 7 = On Generator (see P.15) ...…….. Automatic Transfer Switch 8 = All Pump Disable ……... Phase Monitor 9 = Sequence Input 1 ….…… Lead Select Switch - 1 as Lead 10 = Sequence Input 2 ….…… Lead Select Switch - 2 as Lead 11 = Sequence Input 3 ….…… Lead Select Switch - 3 as Lead 12 = Sequence Input 4 ….…… Lead Select Switch - 4 as Lead 13 = Call Pump 1 Last …….……. VFD / Bypass Logic 14 = Call Pump 2 Last …….……..… VFD / Bypass Logic 15 = Call Pump 3 Last …….……. VFD / Bypass Logic 16 = Call Pump 4 Last …….……. VFD / Bypass Logic 17 = Low Float Telemetry & Alarm Only…Low Level Float Switch 18 = High Float Telemetry & Alarm Only...High Level Float Switch 19 = Pump 1 Running Telemetry Only….. Starter Auxiliary Contact 20 = Pump 2 Running Telemetry Only …. Starter Auxiliary Contact 21 = Pump 3 Running Telemetry Only …. Starter Auxiliary Contact 22 = Pump 4 Running Telemetry Only …. Starter Auxiliary Contact 23 = Pump 1 Fault Telemetry Only…….…….. Pump Fault Logic 24 = Pump 2 Fault Telemetry Only…….…….. Pump Fault Logic 25 = Pump 3 Fault Telemetry Only…….…….. Pump Fault Logic 26 = Pump 4 Fault Telemetry Only…….…….. Pump Fault Logic 27 = Telemetry A …… Telemetry Contact 28 = Telemetry B …… Telemetry Contact 29 = Telemetry C …… Telemetry Contact 30 = Telemetry D ……...……. Telemetry Contact 31 = Bubbler System Failure ……. Bubbler System Fault Contact 32 = Float Backup – Low Level ….……... Low Level Float Switch 33 = Float Backup – Off Level …….……... Off Level Float Switch 34 = Float Backup – 1ST On Level ….... 1ST On Level Float Switch 35 = Float Backup – 2ND On Level ….. 2ND On Level Float Switch 36 = Float Backup – 3RD On Level ….. 3RD On Level Float Switch 37 = Float Backup – 4TH On Level ..…. 4TH On Level Float Switch 38 = Float Backup – High Level ……... High Level Float Switch
F.02	2		Discrete Input 2 Function	
F.03	3		Discrete Input 3 Function	
F.04	4		Discrete Input 4 Function	
F.05	5		Discrete Input 5 Function	
F.06	6		Discrete Input 6 Function	
F.07	7		Discrete Input 7 Function	
F.08	8		Discrete Input 8 Function	
F.09	9		Discrete Input 9 Function	
F.10	10		Discrete Input 10 Function	
F.11	11		Discrete Input 11 Function	
F.12	12		Discrete Input 12 Function	
F.13	13		Discrete Input 13 Function	
F.14	14		Discrete Input 14 Function	
F.15	15		Discrete Input 15 Function	
F.16	16		Discrete Input 16 Function	
F.17	17		Discrete Input 17 Function	
F.18	18		Discrete Input 18 Function	
F.19	0		Spare Parameter	
F.20	0		Spare Parameter	
F.21	0		Spare Parameter	
F.22	0		Spare Parameter	
F.23	1		Analog Output 1 Function	1 = Pump 1 Speed (Active When Pump 1 is Called) 2 = Pump 2 Speed (Active When Pump 2 is Called) 3 = Pump 3 Speed (Active When Pump 3 is Called) 4 = Pump 4 Speed (Active When Pump 4 is Called) 5 = Speed Reference any Pump (Always Active) 6 = Follow Wet Well Level
F.24	2		Analog Output 2 Function	
F.25	3		Analog Output 3 Function	
F.26	4		Analog Output 4 Function	

MENU - INPUT STATUS DISPLAY

Parameter Number	Description of Parameter	
n.01	Discrete Input 1 Status	0 = Input Open 1 = Input Closed Note: Discrete Input Status is used when troubleshooting the wiring and logic connected to the various Controller discrete inputs.
n.02	Discrete Input 2 Status	
n.03	Discrete Input 3 Status	
n.04	Discrete Input 4 Status	
n.05	Discrete Input 5 Status	
n.06	Discrete Input 6 Status	
n.07	Discrete Input 7 Status	
n.08	Discrete Input 8 Status	
n.09	Discrete Input 9 Status	
n.10	Discrete Input 10 Status	
n.11	Discrete Input 11 Status	
n.12	Discrete Input 12 Status	
n.13	Discrete Input 13 Status	
n.14	Discrete Input 14 Status	
n.15	Discrete Input 15 Status	
n.16	Discrete Input 16 Status	
n.17	Discrete Input 17 Status	
n.18	Discrete Input 18 Status	
n.19	Auxiliary Analog Input 1 Value	Range: 0 – 255 Where: 0 = 0mA 51 = 4mA 255 = 20mA
n.20	Auxiliary Analog Input 2 Value	
n.21	Auxiliary Analog Input 3 Value	
n.22	Auxiliary Analog Input 4 Value	

MENU - DATA DISPLAY

Parameter Number	Description of Parameter
d.01	Voltage of +5 Volt Power Supply (Measured Ahead of Voltage Regulator) Normal Range: 10.2V to 11.3V
d.02	Voltage of +24 Volt Power Supply Normal Range: 21.1V to 25.5V
d.03	Pump 1 Speed Reference (Percent of Full Speed)
d.04	Pump 2 Speed Reference (Percent of Full Speed)
d.05	Pump 3 Speed Reference (Percent of Full Speed)
d.06	Pump 4 Speed Reference (Percent of Full Speed)
d.07	Serial Communication Activity Indicator (Shows a "1" When the Master Polls One of the Slaves, or When One of the Slaves Respond. Only Indicates Activity, Not Valid Communication.)
d.08	Serial Communication – Shows the Address of the Last Slave Polled by the Master
d.09	Serial Communication – Shows the Last Modbus Function Code Received
d.10 . . d.86	Serial Communication – Shows the Entire Rest of the Last Modbus Message Received
oPr	Operating Program Revision Number

ALTERNATION SEQUENCE SETUP

STANDARD ALTERNATION P.16 = 1

Notes:

- Unless there is some special circumstance that requires a more complicated pump call sequence, this is the sequence that should be used.
- **Parameter P.17** must be used to select either **First On Last Off** or **First On First Off**.
- Discrete Inputs programmed as **Pump 1-4 Disable** inputs may be used to disable pumps.
- Discrete Inputs programmed as **Call Pump 1-4 Last** inputs may be used to assign pumps to standby status.
- Discrete Inputs programmed as **Sequence Inputs 1-4** may be used to set the lead pump.
- A Discrete Input programmed for **External Alternation** may be used to force alternation. When this feature is used, Automatic Alternation would normally be disabled by setting **Parameter P.18** to **Disabled.**
- If connected to a SCADA system, alternation may be initiated by momentarily setting Coil 136 high, or by forcing the lead pump by writing to Register 40022.

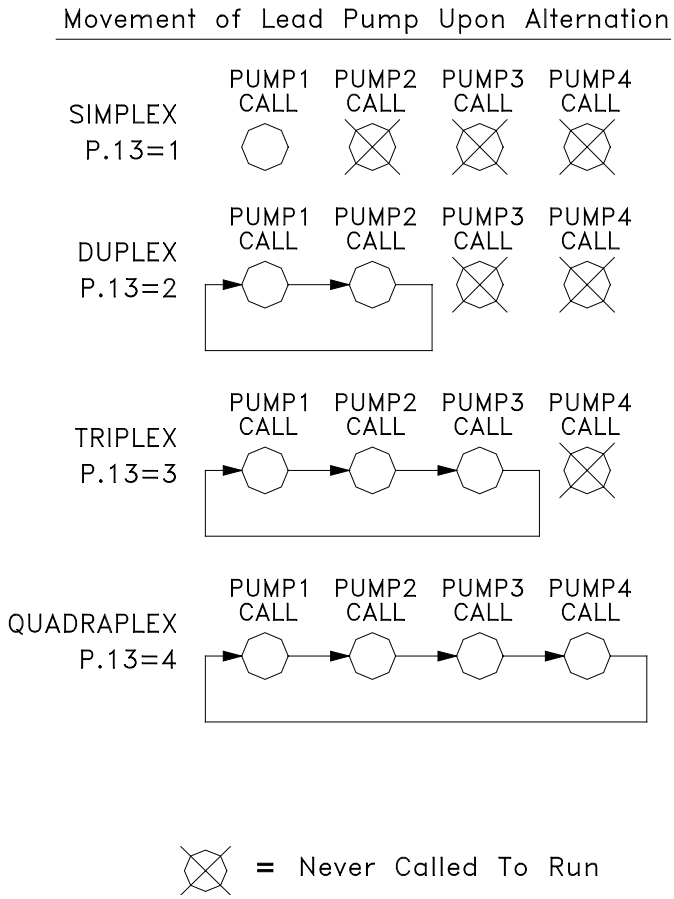

PUMP 1 ALWAYS LEAD P.16 = 2
Stays On With Other Pumps

Notes:

- This sequence is used when it is required that pump 1 always be lead pump. This sequence keeps pump 1 on, when the other pumps are called to run.
- **Parameter P.17** must be used to select either **First On Last Off** or **First On First Off**.
- Discrete Inputs programmed as **Pump 1-4 Disable** inputs may be used to disable pumps.
- Discrete Inputs programmed as **Call Pump 1-4 Last** inputs may be used to assign pumps to standby status.
- Discrete Inputs programmed as **Sequence Inputs 1-4** may be used to set the lead pump.
- If pump 1 is disabled another pump will be called in its place.
- A Discrete Input programmed for **External Alternation** may be used to force alternation. When this feature is used, Automatic Alternation would normally be disabled by setting **Parameter P.18** to **Disabled.**
- If connected to a SCADA system, alternation may be initiated by momentarily setting Coil 136 high, or by forcing the lag pump by writing to Register 40022.

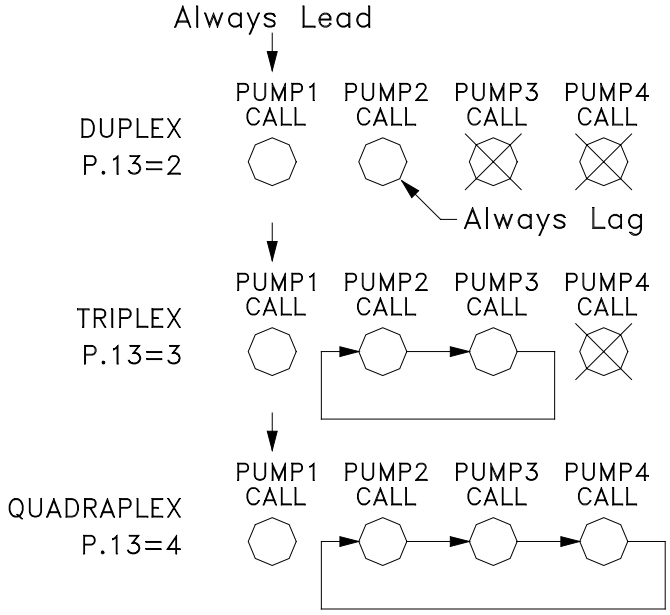

PUMP 1 ALWAYS LEAD P.16 = 3
Turns Off With Other Pumps On

Notes:

- This sequence is used when it is required that pump 1 always be lead, and when it must be turned off when another pump(s) comes on. When a pump from the second group is required, pump 1 is first turned off, then after the Lag Pump Delay, the other pump is turned on.
- **Parameter P.17** must be used to select either **First On Last Off** or **First On First Off**.
- Discrete Inputs programmed as **Pump 1-4 Disable** inputs may be used to disable pumps.
- Discrete Inputs programmed as **Call Pump 1-4 Last** inputs may be used to assign pumps to standby status.
- Discrete Inputs programmed as **Sequence Inputs 1-4** may be used to set the lead pump.
- If pump 1 is disabled, another pump will **Not** be called in its place. The 1ST Pump On/Off Level parameters are dedicated to pump 1 and will not call another pump.
- A Discrete Input programmed for **External Alternation** may be used to force alternation. When this feature is used, Automatic Alternation would normally be disabled by setting **Parameter P.18** to **Disabled.**
- If connected to a SCADA system, alternation may be initiated by momentarily setting Coil 136 high, or by forcing the lag pump by writing to Register 40022.

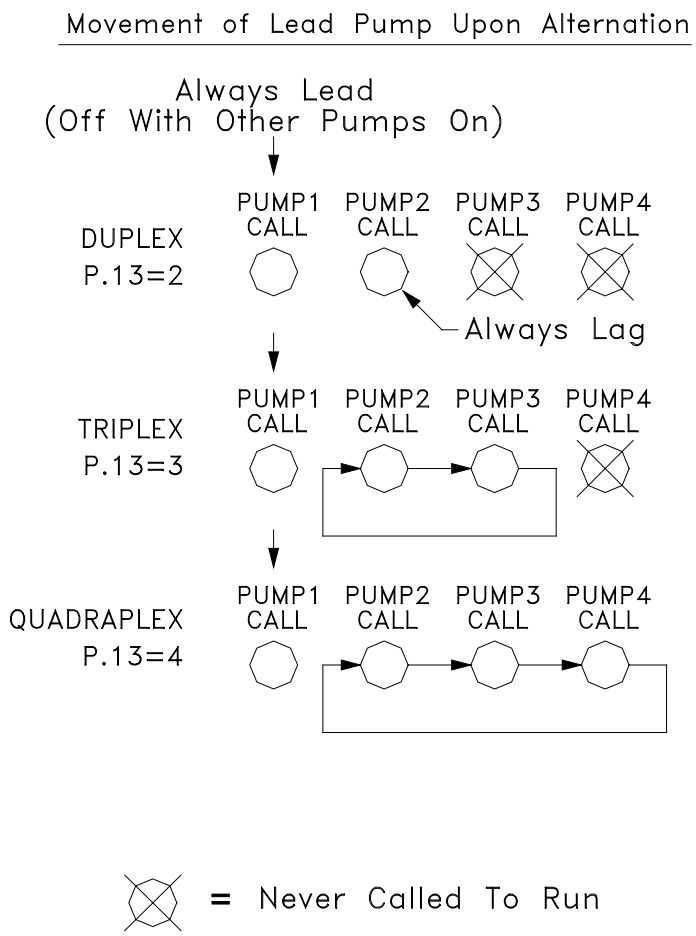

SPLIT ALTERNATION P.16 = 4

Notes:

- This sequence is used when it is required that pumps be alternated in two separate groups.
- **Parameter P.17** must be used to select either **First On Last Off** or **First On First Off**.
- Discrete Inputs programmed as **Pump 1-4 Disable** inputs may be used to disable pumps.
- Discrete Inputs programmed as **Call Pump 1-4 Last** inputs may be used to assign pumps to standby status.
- Discrete Inputs programmed as **Sequence Inputs 1-4** may be used to set the lead pump.
- If pumps from group 1 are disabled, then pumps in group #2 may be called to take their place.
- A Discrete Input programmed for **External Alternation** may be used to force alternation. When this feature is used, Automatic Alternation would normally be disabled by setting **Parameter P.18** to **Disabled.**
- If connected to a SCADA system, alternation of Group #1 may be initiated by momentarily setting Coil 136 high, or by forcing the lead pump position by writing to Register 40022.

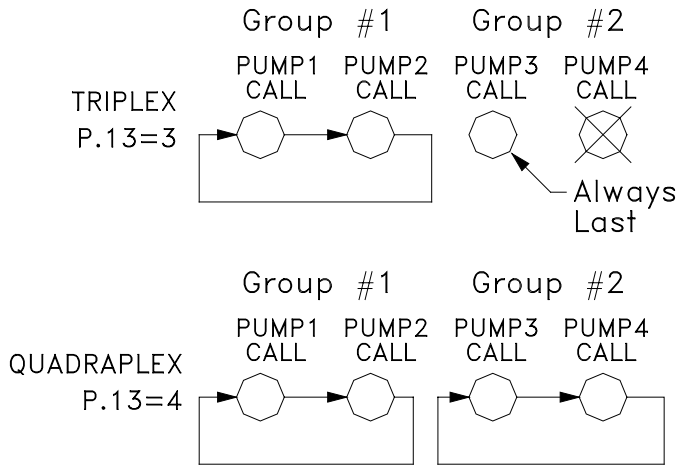

FIXED SEQUENCE P.16 = 5

Notes:

- This sequence is used when no alternation is required and when pump 1 should normally be lead pump. Other pumps may be set as lead by setting parameter P.39.
- Discrete Inputs programmed as **Pump 1-4 Disable** inputs may be used to disable pumps.
- Discrete Inputs programmed as **Call Pump 1-4 Last** inputs may be used to assign pumps to standby status.
- Discrete Inputs programmed as **Sequence Inputs 1-4** may be used to set the lead pump.
- **The Pump Stop Mode** (Parameter P.17) has no effect on this sequence.
- **Automatic Alternation Enable/Disable** (Parameter P.18) has no effect on this sequence.
- The **External Alternation** feature will not function when using this sequence.
- If connected to a SCADA system, the lead pump position may be set by writing to Register 40022.

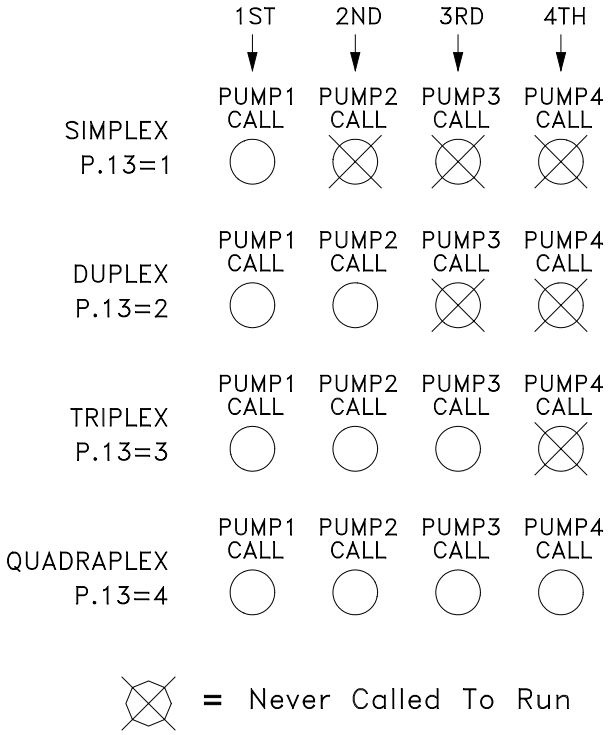

STEPPED ON/OFF SEQUENCE P.16 = 6

Only One Pump Runs at a Time

Notes:

- This sequence is used in stations where there is a significant difference in the size of the pumps, and when only one pump is to be allowed to run at a time. When there is a need for more pumping, the smaller pump is turned off and the next larger pump is called to run. As the need for pumping decreases, the larger pump is turned off and a smaller pump is called to run in its place (provided the Off Levels are staggered).
- The **Lag Pump Delay** operates to give the check valve of the pump being turned off time to close before another pump is called to run.
- Discrete Inputs programmed as **Pump 1-4 Disable** inputs should be used to disable pumps. It is critical that the largest pump in the group have some type of pump fault logic connected to the respective Pump Disable discrete input.
- Discrete Inputs programmed as **Call Pump 1-4 Last** will not function when using this sequence.
- Discrete Inputs programmed as **Sequence Inputs 1-4** will not function when using this sequence.
- **The Pump Stop Mode** (Parameter P.17) has no effect on this sequence.
- **Automatic Alternation Enable/Disable** (Parameter P.18) has no effect on this sequence.
- The **External Alternation** feature will not function when using this sequence.
- The **On Generator** (Parameter P.15) has no effect on this sequence.

SYSTEM STATUS

High Level Alarm:

- Upon a High Level Alarm, the indicator will come on and the relay contacts will close.
- A High Level Alarm is delayed for ten seconds after power is applied.
- The High Level Alarm relay contacts will be closed when there is no power on the controller.
- The moment electrical power is applied to the controller, the High Level Alarm relay contacts open.
- The High Level Alarm relay contacts will close if there is a complete failure of the controller.
- A High Level float may also be used to activate alarm. The discrete input used must be assigned function 18 or 38.

Low Level Alarm:

- Upon a Low Level Alarm, the indicator will come on and the relay contacts will close.
- A Low Level Alarm is delayed for thirty seconds after power is applied.
- The Low Level Alarm relay contacts will be open when there is no power on the controller.
- A Low Level float may also be used to activate alarm. The discrete input used must be assigned function 17 or 32.

Fault Indication - The Fault indicator shows when there is something wrong with the system.

Fault Codes – To view Fault Codes go to the System Setup Menu and scroll past parameters P.13 – P.39 to parameter FLC where the Fault Code may be read. Please see the Fault Code Table below.

FLC FAULT CODE TABLE

FAULT CODE	DESCRIPTION OF CONDITION
0	Normal
1	Serial Communication Fault – Overrun Error reading incoming message.
2	Serial Communication Fault – Time out error reading incoming message.
3	Serial Communication Fault – Time out error responding to message.
4	Serial Communication Fault – Incoming message failed Checksum test.
5	Serial Communication Fault – Invalid Modbus Function Code.
6	Serial Communication Fault – Trying to preset more than 35 registers using Modbus Function Code No. 16.
7	Serial Communication Fault – Trying to force more than 100 Coils using Modbus Function Code No. 15.
8	Parameter Setup Fault – More than one Discrete Input is assigned to the same Function.
9	Parameter Setup Fault – Pump On & Pump Off parameters are set too close together. (They must be at least 0.2 feet apart with P.36 = 1, or 2 feet apart with P.36 = 0, or 0.02 feet apart with P.36 = 2.)
10	Parameter Setup Fault – Pump On & Pump Off parameters are upside down. (Pump Off Level must be lower than the Pump On Level, for a pump down application.)
11	Parameter Setup Fault – VFD speed reference fault. Level at Minimum Speed is set too close to Level at 100% speed. (They must be at least 0.5 feet apart with P.36 = 1, or 5 feet with P.36 = 0, or 0.05 feet with P.36 = 2.)
12	Parameter Setup Fault – VFD speed reference fault. Level at Minimum Speed and Level at 100% speed are backwards.
13	Serial Communication Fault – The UART detected a Framing Error reading the incoming message. It did not find Stop Bit where expected.
14	Serial Communication Fault – Noise Detected on incoming message.
15	Bubbler System Fault Discrete Input Closed – Pump operation from transducer input will be disabled. Pump Operation on Float Backup will be allowed.
16	Pump Operation on Float Backup
17	Backup Float Switch Out of Sequence. (Fault will clear when normal operation is verified or when power is cycled.)
18	This indicates that the ALL PUMP DISABLE (Phase Monitor) discrete input is closed. All the pumps will be turned off.
31	Serial Communication Fault – Write Attempt to Register Not Marked for "Write" using Function Code No. 05
32	Serial Communication Fault – Write Attempt to Register Not Marked for "Write" using Function Code No. 06
33	Serial Communication Fault – Write Attempt to Register Not Marked for "Write" using Function Code No. 15
34	Serial Communication Fault – Write Attempt to Register Not Marked for "Write" using Function Code No. 16
35	Serial Communication Fault – Write Attempt made with Remote Telemetry Register Access Mode Parameter (P.33) set for Read Only.

WET WELL LEVEL DISPLAY CALIBRATION

LEVEL INPUT ZERO – P.25

This parameter is used to make the display read zero feet of water with a wet well level input of 4.0mA.

Calibration Procedure:

1. Apply a 4.0mA signal to the Wet Well Level Analog Input.
   (Alternate Procedure – Pull the pressure transducer or bubbler tube out of the water.)

2. Scroll to the place in the System Setup Sub-Menu where parameter P.25 is displayed.

3. Press the Scroll / Change mode push-button. (The Wet Well Level will be displayed.)

4. Use the Up / Down push-buttons to make the display read zero feet.

5. Perform the procedure below to calibrate the "LEVEL INPUT SPAN" parameter.

LEVEL INPUT SPAN – P.24

This parameter is used to establish the wet well level (in feet of water) that corresponds to an analog input of 20mA.

Calibration Procedure:

1. Apply a 20mA signal to the Wet Well Level Analog Input.
   (Alternate Procedure – Subject the pressure transducer or bubbler tube to a known depth of water.)

2. Scroll to the place in the System Setup Sub-Menu where parameter P.24 is displayed.

3. Press the Scroll / Change mode push-button. (The Wet Well Level will be displayed.)

4. Use the Up / Down push-buttons to make the display read the level (in feet of water) that your 20mA signal represents.
   (Alternate Procedure – Use the Up / Down push-buttons to make the display read the number of feet of water that the pressure transducer or the end of the bubbler tube is submerged under water.)

5. Repeat the procedure above for the "LEVEL INPUT ZERO" parameter.

LEVEL DISPLAY SPAN VERSUS TRANSDUCER CALIBRATION

		Transducer Calibration					
		1.10psi @ 20mA	2.17psi @ 20mA	5.0psi @ 20mA	10.0psi @ 20mA	15.0psi @ 20mA	100psi @ 20mA
Level Display Span	P.36 = 0	-	-	-	-	-	231 feet
	P.36 = 1	-	5.0 feet	11.5 feet	23.1 feet	34.6 feet	-
	P.36 = 2	2.55 feet	-	-	-	-	-

Level Display Span is what should be displayed with a 20mA Level Input.
Parameter **P.36** is used to set the decimal point position.
To find the Level Input Span Setting for other transducers use the following equation: Pressure (psi) x 2.309 = Level (feet of water)

VARIABLE FREQUENCY DRIVE SPEED CONTROL OPTION SETUP

PUMP DOWN (EMPTY A TANK) APPLICATION - EXAMPLE

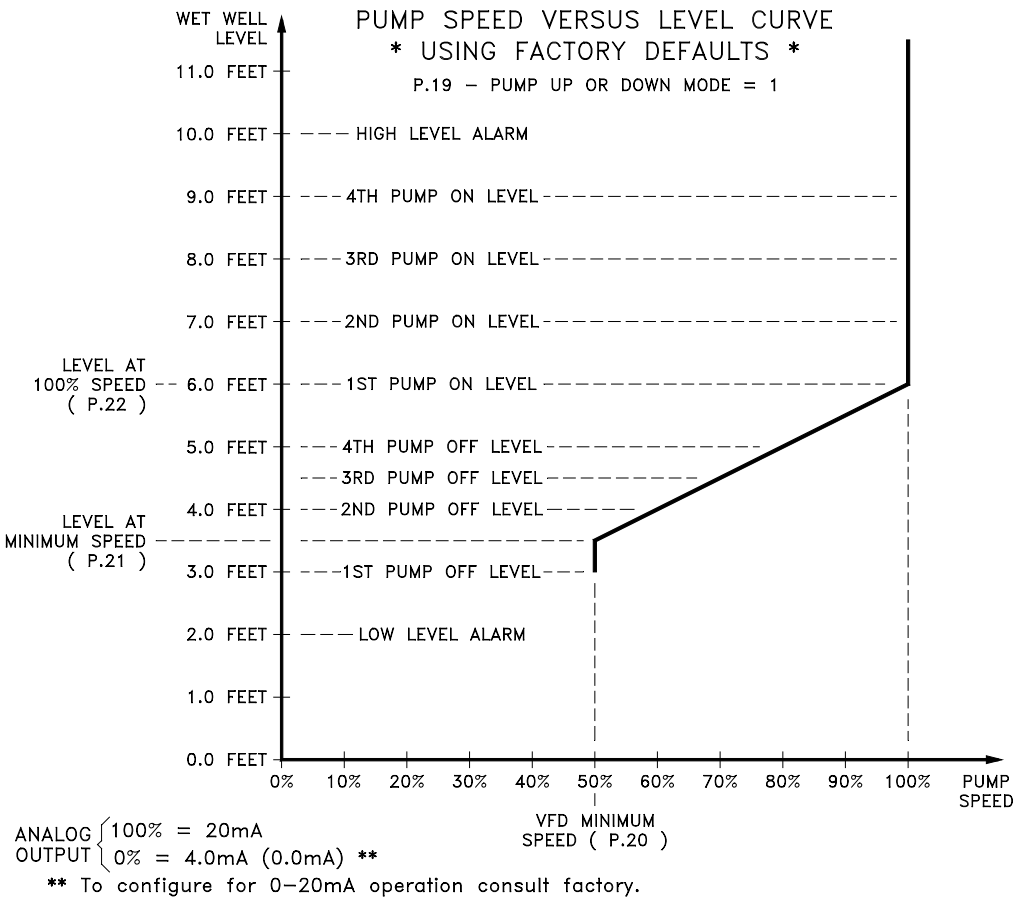

The Following Pameters Are Used To Establish The Speed Versus Level Curve:

P.20 – VFD Minimum Speed (Percent of Full Speed)
P.21 – Level at Minimum Speed (Feet)
P.22 – Level at 100% Speed (Feet)
P.23 – Pump Start Speed Boost Time (Seconds) - This feature causes the Speed Reference of all pumps to temporarily increase to 100% when a pump is called, and each time an additional pump is called. The pump speed stays at 100%, for the time set on the parameter. The pump speed then returns to normal. Set parameter to zero seconds to disable this feature. This feature may be used in cases where a pump is started at a speed that is significantly less than 100%, to ensure that the Check Valve opens. This feature is not used in the example above.

Notes For Setting Up The Pump Speed Versus Level Curve:

- A drawing should be made similar to the one above in order to coordinate the Pump Call On and Off Levels with the Speed Versus Level Curve.
- For each application there is usually a **Minimum Speed**, below which pump operation is undesirable.
- For cases where some pumps are operated on a VFD, and others are operated at full speed, care should be taken to setup the system so that the speed of the pumps on VFDs is not allowed to go unacceptably low while being run with the other pumps at full speed.
- Care should be taken not to set the **Level At 100% Speed** parameter and the **Level At Minimum Speed** parameters too close together. The Fault Indicator on the front of the controller will be turned on if these two parameters are set too close together, or are accidentally switched around. See the Fault Code Table for more information.
- With the **VFD Minimum Speed** being controlled by the Pump Controller, the VFDs must be setup so that a 4mA input equates to a speed near zero.

REMOTE TELEMETRY REGISTERS

REGISTER ADDRESS	READ	WRITE	DESCRIPTION OF REGISTER CONTENTS (Where a Coil is represented by a Bit in a Register)															
40001	✓		16	15	14	13	12	11	10	9	8	7	6	5	4	3	2	1 COIL
					Telemetry D	On Generator	Phase Monitor	Telemetry C	Telemetry B	On Float Backup	Telemetry A	Bubbler System Fault	Pump 4 Fault	Pump 3 Fault	Pump 2 Fault	Pump 1 Fault	Low Level or Low Float	High Level or High Float
40002	✓	✓	32	31	30	29	28	27	26	25	24	23	22	21	20	19	18	17
											Clear ETM 4	Clear ETM 3	Clear ETM 2	Clear ETM 1	Force Pump 4 On	Force Pump 3 On	Force Pump 2 On	Force Pump 1 On
40003	✓		Pump 1 Elapsed Time Meter (hours and 1/10 hours)															
40004	✓		Pump 2 Elapsed Time Meter (hours and 1/10 hours)															
40005	✓		Pump 3 Elapsed Time Meter (hours and 1/10 hours)															
40006	✓		Pump 4 Elapsed Time Meter (hours and 1/10 hours)															
40007	✓		Spare Register															
40008	✓		128	127	126	125	124	123	122	121	120	119	118	117	116	115	114	113
			Low Float	1st On Float	2nd On Float	3rd On Float	4th On Float				High Float	Off Float	On Generator	Phase Monitor	Pump 4 Running	Pump 3 Running	Pump 2 Running	Pump 1 Running
40009	✓	✓	144	143	142	141	140	139	138	137	136	135	134	133	132	131	130	129
											Force Alt		Pump 4 Fault	Pump 3 Fault	Pump 2 Fault	Pump 1 Fault	Low Level	High Level
40010	✓	✓	160	159	158	157	156	155	154	153	152	151	150	149	148	147	146	145
											Pump 4 Disable	Pump 3 Disable	Pump 2 Disable	Pump 1 Disable	Pump 4 Called	Pump 3 Called	Pump 2 Called	Pump 1 Called

40011	✓		Wet Well Level (feet and 1/10 feet)
40012	✓	✓	1ST Pump On Level (feet and 1/10 feet)
40013	✓	✓	1ST Pump Off Level (feet and 1/10 feet)
40014	✓	✓	2ND Pump On Level (feet and 1/10 feet)
40015	✓	✓	2ND Pump Off Level (feet and 1/10 feet)
40016	✓	✓	3RD Pump On Level (feet and 1/10 feet)
40017	✓	✓	3RD Pump Off Level (feet and 1/10 feet)
40018	✓	✓	4TH Pump On Level (feet and 1/10 feet)
40019	✓	✓	4TH Pump Off Level (feet and 1/10 feet)
40020	✓	✓	High Level Alarm (feet and 1/10 feet)
40021	✓	✓	Low Level Alarm (feet and 1/10 feet)
40022	✓	✓	Forced Lead Pump Position 1(2,3,4) = Pump 1(2,3,4) as Lead, 0 = Normal Alternation
40023	✓		Actual Lead Pump Position
40024	✓		Calculated VFD Speed Reference
40025-4034	✓		Spare Register

40035	✓		560	559	558	557	556	555	554	553	552	551	550	549	548	547	546	545
											Discrete Input 8	Discrete Input 7	Discrete Input 6	Discrete Input 5	Discrete Input 4	Discrete Input 3	Discrete Input 2	Discrete Input 1

40036	✓		576	575	574	573	572	571	570	569	568	567	566	565	564	563	562	561
											Discrete Input 16	Discrete Input 15	Discrete Input 14	Discrete Input 13	Discrete Input 12	Discrete Input 11	Discrete Input 10	Discrete Input 9

40037	✓		592	591	590	589	588	587	586	585	584	583	582	581	580	579	578	577
																	Discrete Input 18	Discrete Input 17

40038	✓		Pump 1 VFD Speed Reference (Percent of Full Speed)
40039	✓		Pump 2 VFD Speed Reference (Percent of Full Speed)
40040	✓		Pump 3 VFD Speed Reference (Percent of Full Speed)
40041	✓		Pump 4 VFD Speed Reference (Percent of Full Speed)
40042	✓		Auxiliary Analog Input 1 (0-255)
40043	✓		Auxiliary Analog Input 2 (0-255)
40044	✓		Auxiliary Analog Input 3 (0-255)
40045	✓		Auxiliary Analog Input 4 (0-255)
40046	✓	✓	Pump Speed Control for Pumps that are “Forced On” (Valid Range 0-100%)
40047	✓		Fault Code Parameter value (FLC)
40048	✓		Spare Register
40049	✓		Factory Test Parameter - Voltage of +5V Power Supply (Measured Ahead of Voltage Regulator)
40050	✓		Factory Test Parameter - Voltage of +24V Power Supply
40051	✓		Spare Register

MODBUS FUNCTIONS SUPPORTED		
FUNCTION CODE	**FUNCTION DISCRIPTION**	**NOTES**
01	Read Coil Status	
02	Read Input Status	
03	Read Holding Registers	
04	Read Input Registers	
05	Force Single Coil	
06	Preset Single Register	
08	Diagnostics - Sub-function 00 (Return Query Data)	
15	Force Multiple Coils	Limited to 100 Coils
16	Preset Multiple Registers	Limited to 35 Registers

REMOTE TELEMETRY NOTES:

- An attempt to write to registers or coils not marked for "Write" will generate Fault Code 31, 32, 33, or 34. An attempt to write to a register or coil with the Remote Telemetry Register Access Mode Parameter (P.33) set for Read Only, will generate Fault Code 35. See the Fault Code Table.

- Regardless of what function might be assigned to a discrete input, its status may always be read from registers 40035-40037. If no control function is desired for a particular discrete input and only its status is desired, then the input may be assigned function "0" (General Purpose Telemetry), and its status may be read from registers 40035-40037.

- The **Serial Communication Activity Indicator** (data display parameter d.07) may be used to help troubleshoot the serial communication. It typically pulses from "0" to "1" momentarily to indicate that the master, or one of the slaves, is sending a message. It may stay "1" if there is very little time between messages. It does not indicate that a valid communication has occurred, only that there is activity on the serial port.

- The **Address of Last Slave Polled by Master** (data display parameter d.08) may be used to help troubleshoot the serial communication. It shows the address of the last slave that was polled by the master.

- Setup problems such as having selected the wrong Protocol, Baud Rate, Parity, or RTS Control Delays may not cause a **Fault Indication** or **Fault Code (FLC)** to be generated. This is because the controller does not always read the entire message and run the error checking routines. It reads the first part of a message to determine the address of the slave being polled. If the slave address does not match that set on parameter P.28 (Slave Address), then the rest of the message is ignored and the error checking routines are not performed. The above mentioned setup problems usually result in the slave address not matching P.28, so the rest of the message is ignored and no fault indication given. Sometimes these setup errors cause the generation a Fault Code that may not reflect the root of the problem.

- The register 40001 is intended to be a **Common Alarm register**. If, for example, it is desired that a Control Panel Intrusion activate a common alarm, then a Discrete Input must be programmed for use as Telemetry A, B, C, or D, and the door switch connected to that Discrete Input. Then register 40001 should be monitored. A value of zero in register 40001 means no alarm, and a non-zero value means there is an alarm.

- To **Disable a Pump** set coil 149, 150, 151, or 152 in register 40010. To return a pump to normal operation, clear the respective coil. Upon a loss of serial communication, the Pump Disable Logic will be automatically reset, and any pump that had been remotely disabled will be re-enabled after the delay set on parameter P.38. For this feature to work properly, the master must poll the controller at intervals shorter than the time set on parameter P.38.

- To **Force a Pump On** set coil 17, 18, 19, or 20 in register 40002. To return the pump to normal operation, clear the respective coil. Upon a loss of serial communication, the Force Pump On Logic will be automatically reset, and any pump that had been remotely forced on will be turned off after the delay set on parameter P.38. For this feature to work properly, the master must poll the controller at intervals shorter than the time set on parameter P.38.

- To control the **Speed of Pumps that are Forced On**, write the desired speed in percent to register 40046. The new value will be stored in non-volatile EEPROM memory. The default speed is 100%.

- **Pump 1-4 Speed References** may be read from registers 40038 - 40041.

- The **High Level or High Float** alarm telemetry (coil 1 in register 40001) is generated by either the comparison of the Transducer Input with the High Level alarm setting or by the High Float switch closure on a discrete input programmed for either function 18 or 38.

- The **Low Level or Low Float** alarm telemetry (coil 2 in register 40001) is generated by either the comparison of the Transducer Input with the Low Level alarm setting or by the Low Float switch closure on a discrete input programmed for either function 17 or 32.

- The **High Level** alarm generated from the Transducer input may be read from coil 129 in register 40009.

- The **High Float** alarm generated from a float switch input, programmed for either function 18 or 38, may be read from coil 120 in register 40008.

- The **Low Level** alarm generated from the Transducer input may be read from coil 130 in register 40009.

- The **Low Float** alarm generated from a float switch input, programmed for either function 17 or 32, may be read from coil 128 in register 40008.

- The **Pump 1, 2, 3, 4 Fault** alarm telemetry on register 40001 coil 3, 4, 5, & 6 (and on register 40009 coil 131, 132, 133, & 134) are generated by the closure of Discrete Inputs programmed for those functions. The inputs programmed for this function perform no control function inside the controller, they only provide telemetry. Even though they are labeled Pump 1, 2, 3, 4 Fault alarms they may be used as general-purpose telemetry.

- The **Pump 1, 2, 3, 4 Called** telemetry on register 40010 coil 145, 146, 147, & 148 are generated inside the controller when it calls a pump to run. Whereas the **Pump 1, 2, 3, 4 Running** telemetry on register 40008 coil 113, 114, 115, & 116 require the closure of Discrete Inputs programmed for those functions. Discrete Inputs programmed for Pump 1, 2, 3, 4 Running perform no control function inside the controller, they only provide telemetry.

- To force **Pump Alternation,** momentarily set coil 136 in register 40009. When alternation is to be regularly performed through the SCADA system, automatic alternation should be disabled. This is done by setting parameter P.18 to 2.

- The **Forcing of the Lead Pump Position** may be accomplished by writing a 1,2,3 or 4 to register 40022. To return the alternation to normal, write a zero to register 40022. Setting register 40022 does not guarantee that the pump selected will be lead. If the pump selected as lead is disabled (by a pump disable discrete input), then the next available pump will be made lead. A lead pump selector switch connected to discrete inputs, programmed as sequence inputs, will also override what is written to register 40022. The contents of register 40022 may be viewed and changed from the front of the unit on parameter P.39. The contents of register 40022 is saved during a power outage in the EEPROM. The actual lead pump position may be read from register 40023.

- **Fault Codes** from parameter FLC may be read from register 40047.

- **Wet Well Level** may be monitored by reading register 40011. The value will be just what is displayed on the front of the controller but with no decimal point.

- **Pump On/Off Levels and High & Low Level Alarm** parameter values may be viewed or changed through the SCADA system. See registers 40012 through 40021. The values will have no decimal point.

- If the optional **Auxiliary Analog Inputs** are present, the value of the input may be read from registers 40042 - 40045. These analog inputs perform no control function inside the controller. They may be used to monitor such things as flow, pump speed, motor current, or whatever is connected to them. The data will have a range of 0 to 255. The same data may be viewed on the front of the controller under parameters d.03 – d.06.

- **Pump 1-4 Elapsed Time Meters** may be read from registers 40003 – 40006. The values read from these registers are intended for use in comparing the pump run time of one pump with the run time of the other pumps at the station, for the purpose of checking for uneven run times. (Uneven run times is an indication of a maintenance problem with one of the pumps.) Periodically the comparison of run times should be made and the registers should reset to zero. The ETM data is stored in non-volatile memory just prior to a total loss of internal 5V power, so the data is not lost during a power outage. (However, if the serial port is being polled as a power outage occurs, the most recent data may occasionally be lost.) To reset one of the ETMs to zero, momentarily set the respective coil (21 – 24) in register 40002.

STANDARD FEATURE - CONNECTION DIAGRAM

SEE NEXT PAGE FOR CONNECTION OF OPTIONAL ANALOG INPUTS AND OUTPUTS

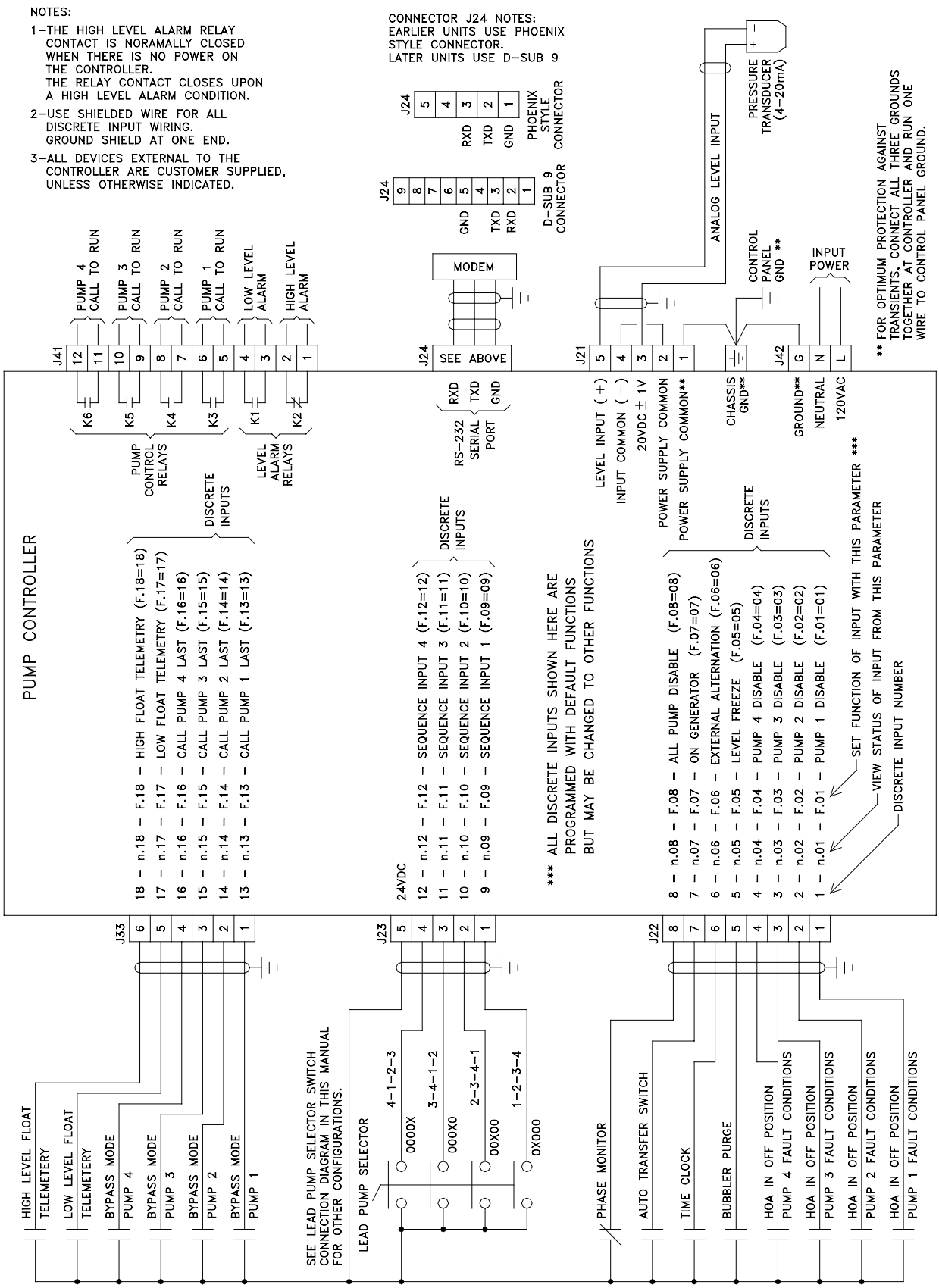

OPTIONAL ANALOG I/O - CONNECTION DIAGRAM

NOTES:

1–USE SHIELDED WIRE FOR ALL ANALOG I/O WIRING. GROUND SHIELD AT ONE END.

2–ALL DEVICES EXTERNAL TO THE CONTROLLER ARE CUSTOMER SUPPLIED, UNLESS OTHERWISE INDICATED.

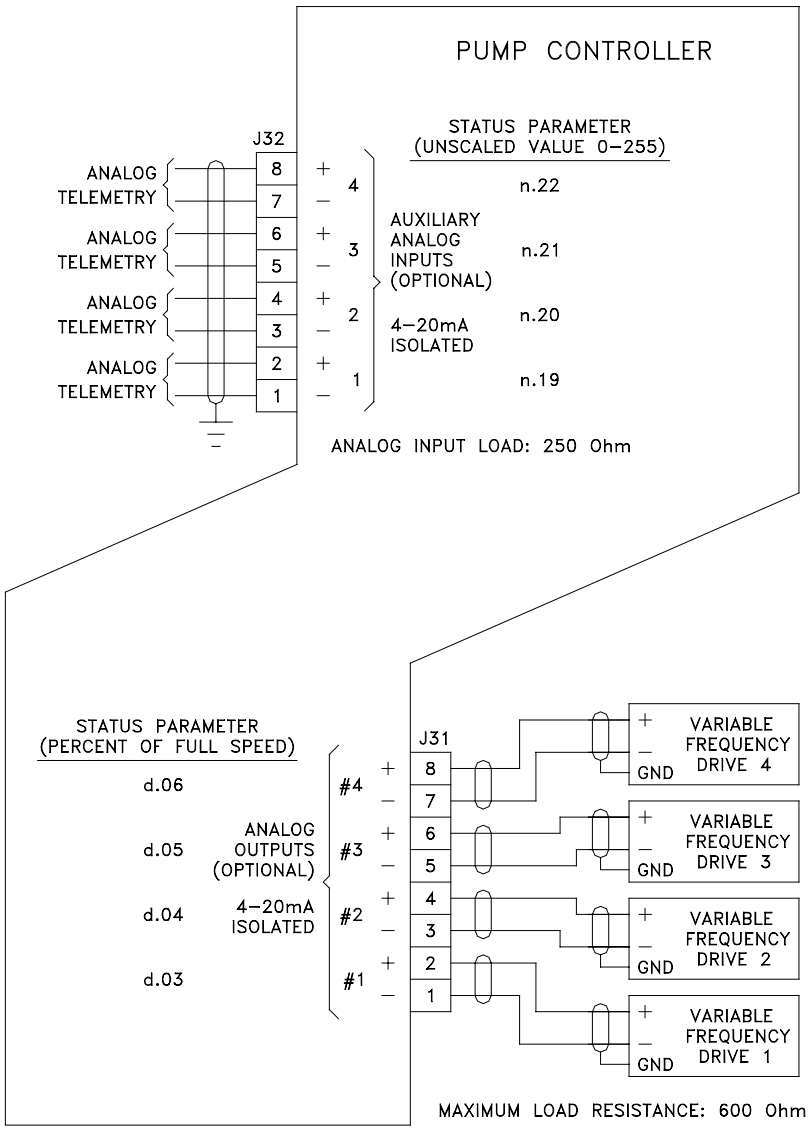

LEAD PUMP SELECTOR SWITCH - CONNECTION DIAGRAM

NOTES:

1–THE ALTERNATION SEQUENCE MODE PARAMETER MUST BE SET TO CORRESPOND TO THE CONNECTION DIAGRAM.

2–ALL DISCRETE INPUTS ARE PROGRAMMABLE. THE FUNCTION OF EACH INPUT MUST BE SET TO CORRESPOND TO THE CONNECTION DIAGRAM.

3–THE LEAD PUMP SELECTOR SWITCHES SHOWN HERE ARE NOT SUPPLIED WITH THE CONTROLLER.

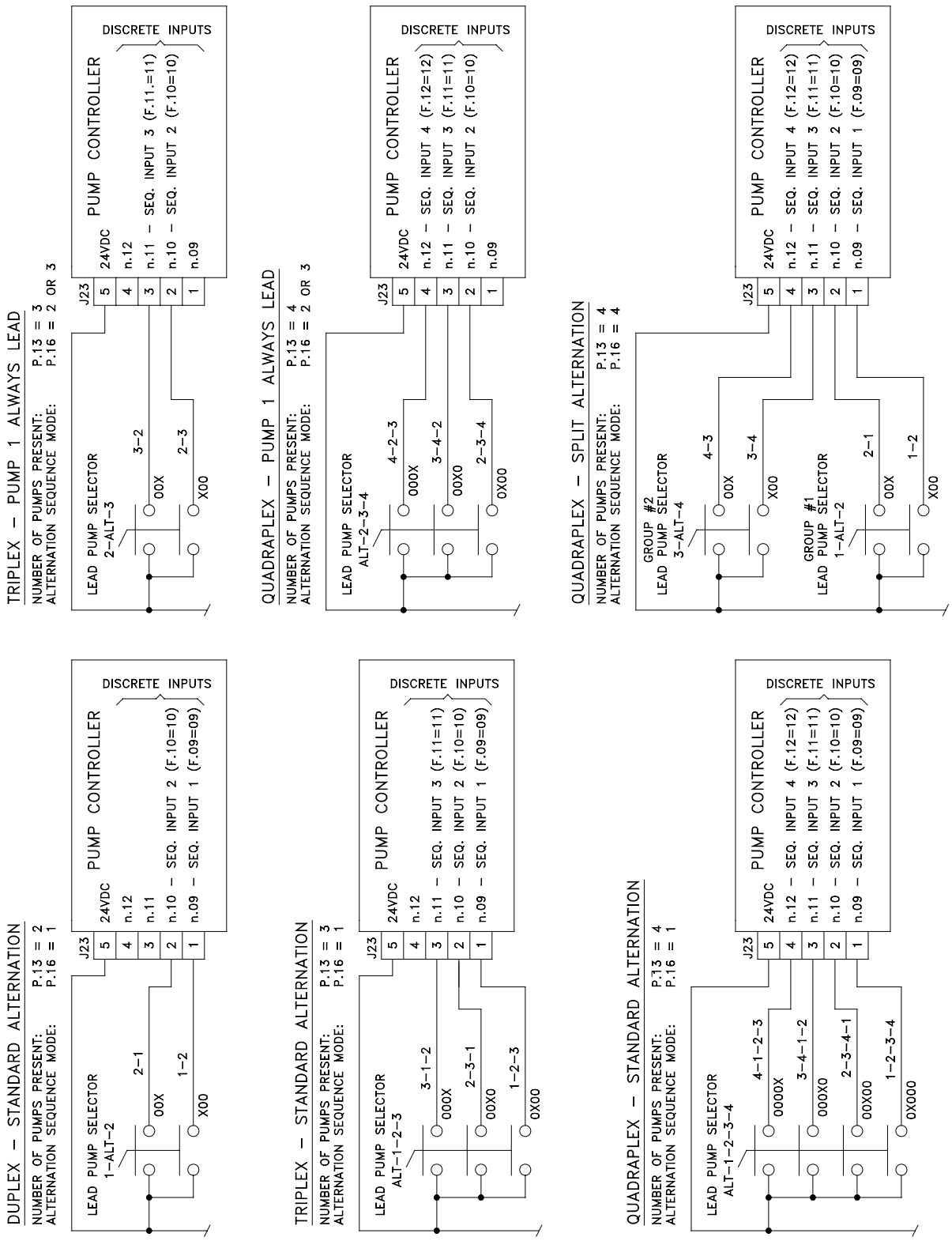

LEVEL INPUT EXAMPLE – CONNECTION DIAGRAM

SUBMERSIBLE PRESSURE TRANSDUCER CONNECTION

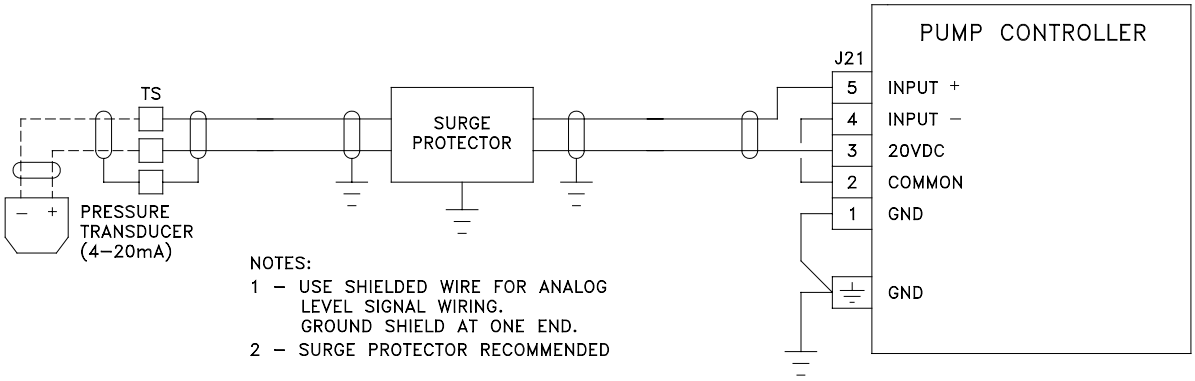

SUBMERSIBLE PRESSURE TRANSDUCER CONNECTION WITH INTRINSICALLY SAFE BARRIER

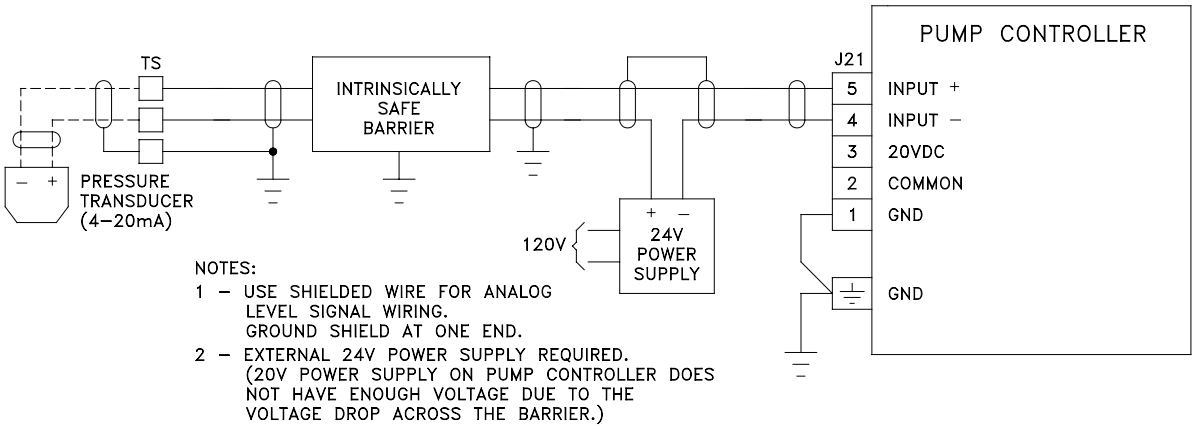

BUBBLER SYSTEM BS2000 CONNECTION

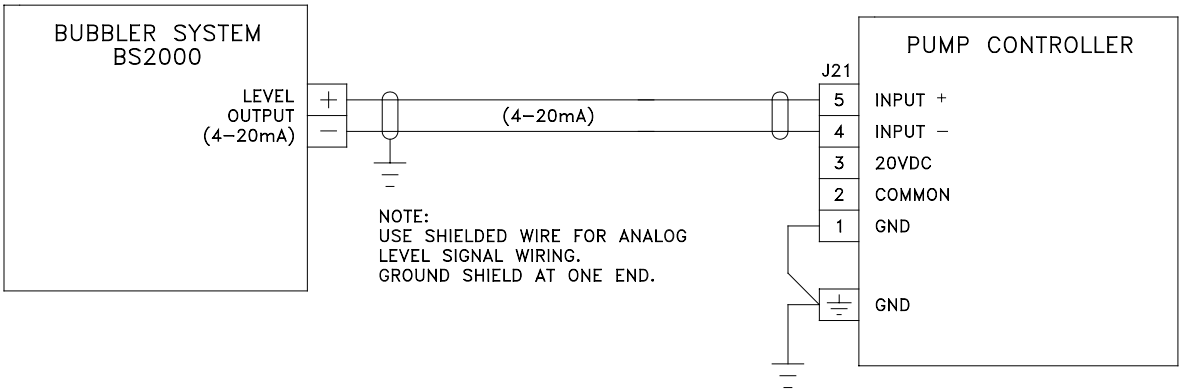

VFD WITH BYPASS EXAMPLE – CONNECTION DIAGRAM

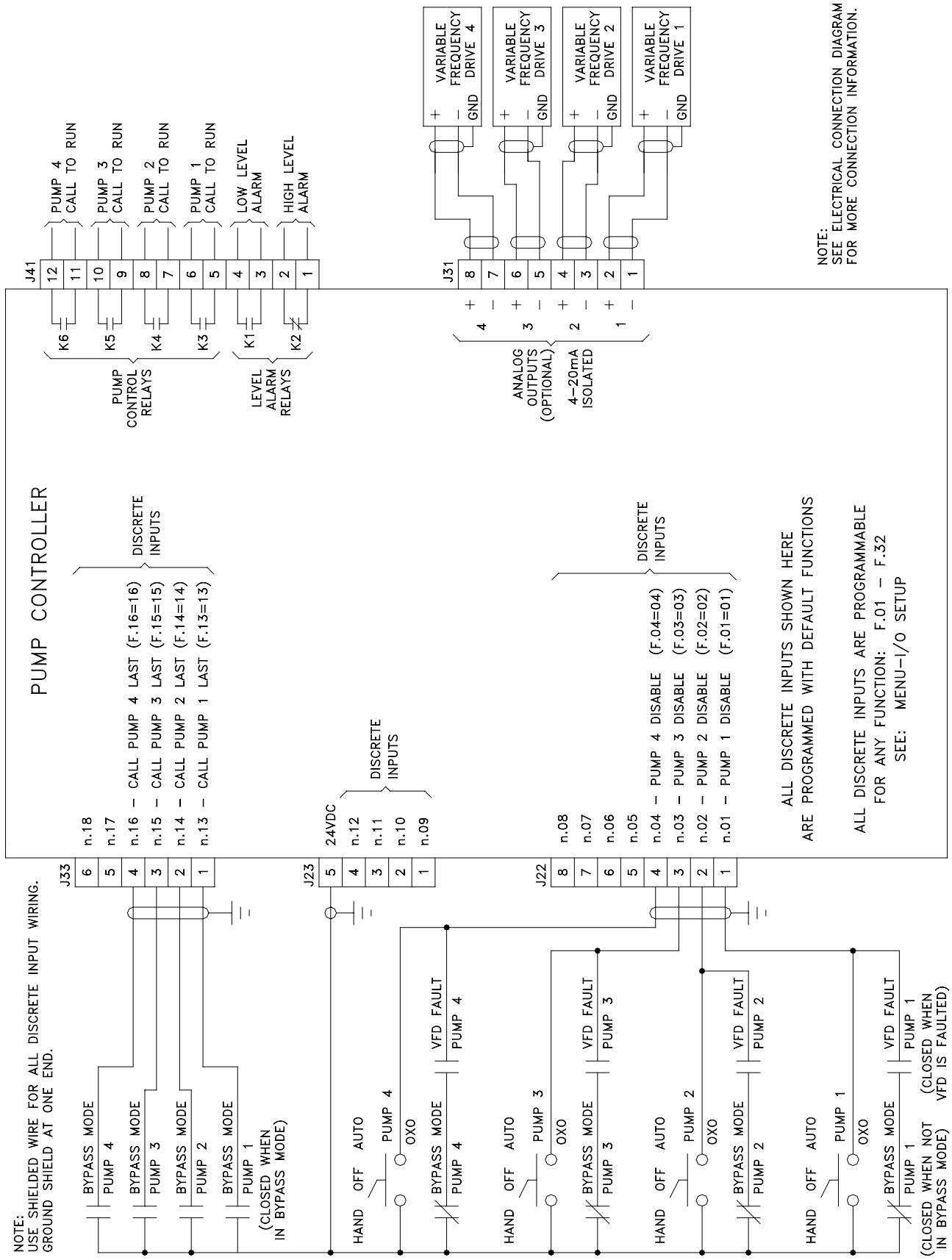

CONTROL SCHEMATIC EXAMPLE – DUPLEX – CONSTANT SPEED WITH 24V FLOAT BACKUP

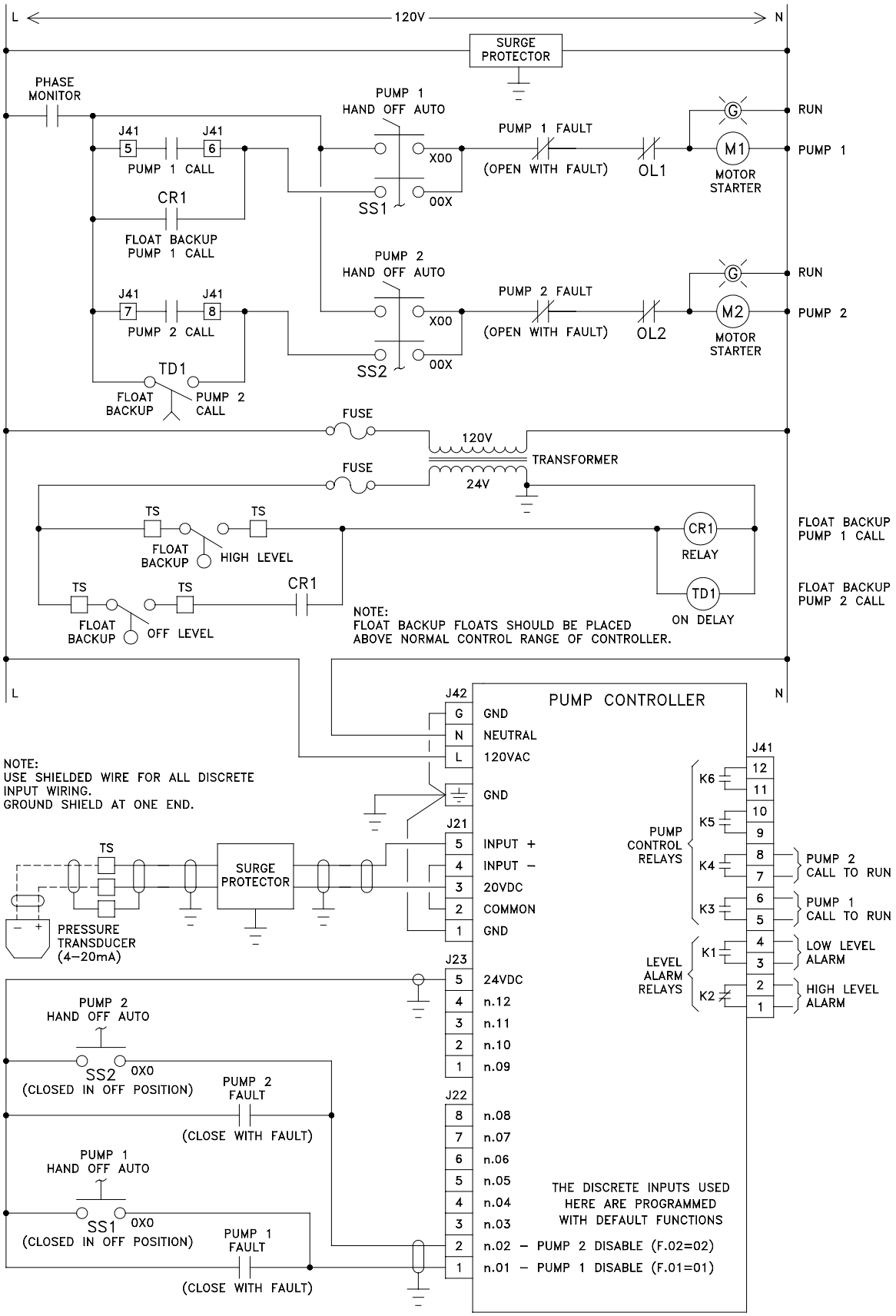

FLOAT BACKUP WITH BUBBLER SYSTEM EXAMPLE - Pump Down

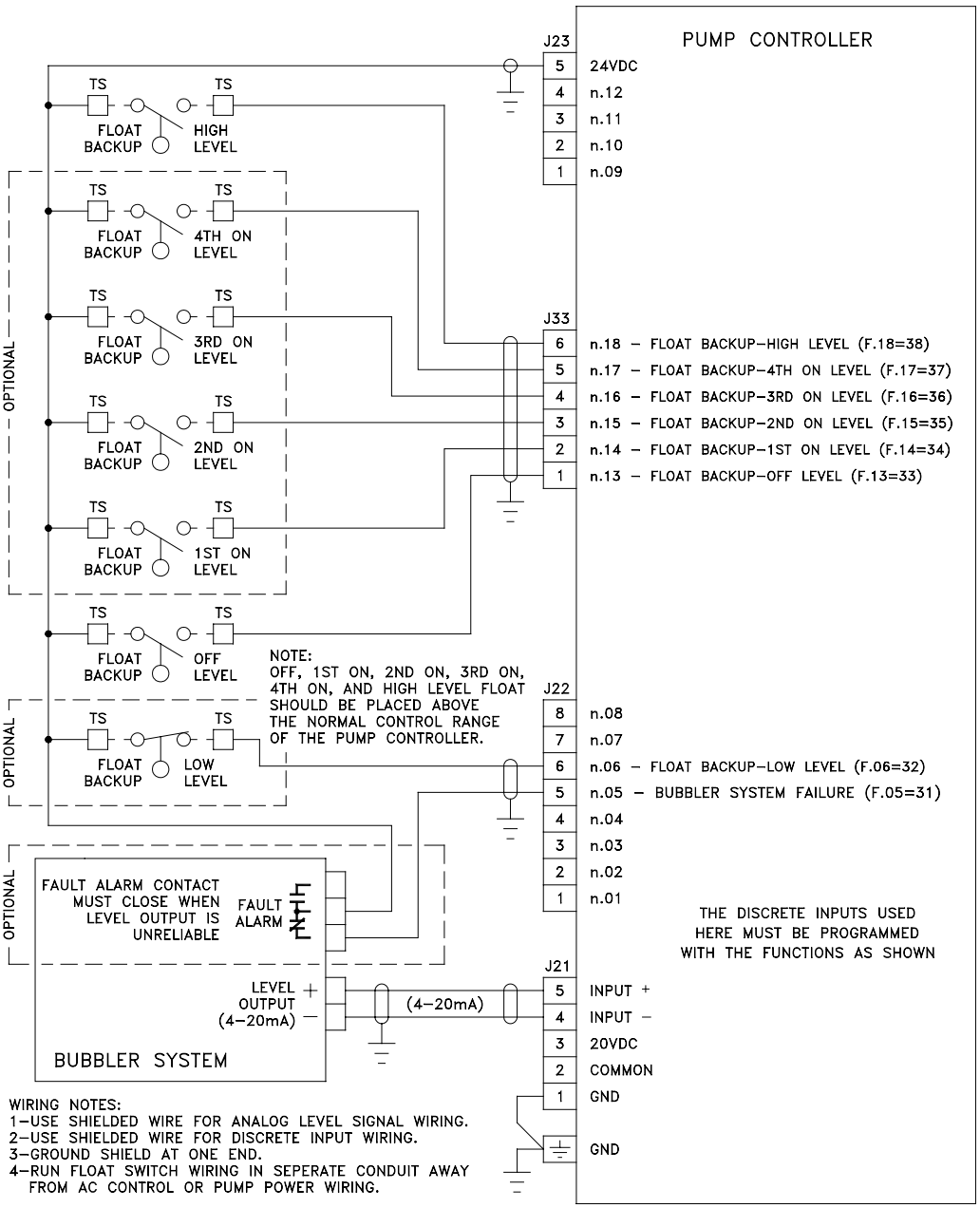

NOTES:

- When a pump is called to run by the Float Backup system, the FAULT light will come on and Fault Code 16 will be generated.
- Float Backup-Low Level is optional and is not required to allow the rest of the float backup system to operate.
- Closure of the Low Level Float Switch will disable all pump operation. However, if two or more higher floats are closed while the Low Level Float input is closed, the Low Level Float is ignored, and the FAULT light is turned on to indicate that there is a Float Out Of Sequence fault (Fault Code 17). (For Pump Up applications, the High Level Float performs this function.)
- When the Low Float input opens, a delay prevents the immediate calling of the pumps. This delay is set on Parameter P37. (For Pump Up applications, the High Level Float performs this function.)
- Note: For Pump Down applications, the Float Backup-Low Level float must be a normally closed float switch.
- Closure of the Float Backup-High Level input will cause all available pumps to be called to run, provided at least one other lower float input closes, not counting the Low Level float. This feature allows for a two float backup system, using for example the High and Off floats. (For Pump Up applications the Low Level Float performs this function.)
- For Pump Up applications the Low, Off, 1st On, 2nd On, 3rd On, and 4th On floats must close as the level drops below the respective level, whereas the High Level float must close as the level rises above the desired high level.
- Closure of the Bubbler System Failure input will cause the controller to not call pumps to run based on the analog level input. With this input closed the Float Backup will be in full control of the pumps. However the analog level input can still cause High Level and Low Level alarms. Also, closure of this input will cause the FAULT light to come on and will generate a Bubbler System Fault (Fault Code 15).

ENCLOSURE MECHANICAL LAYOUT

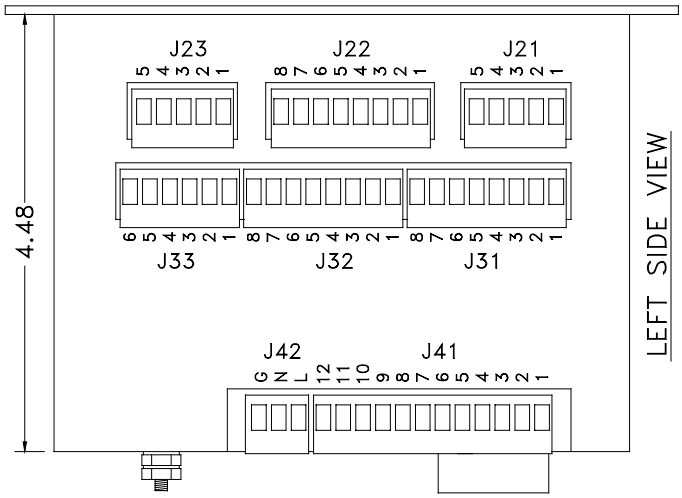

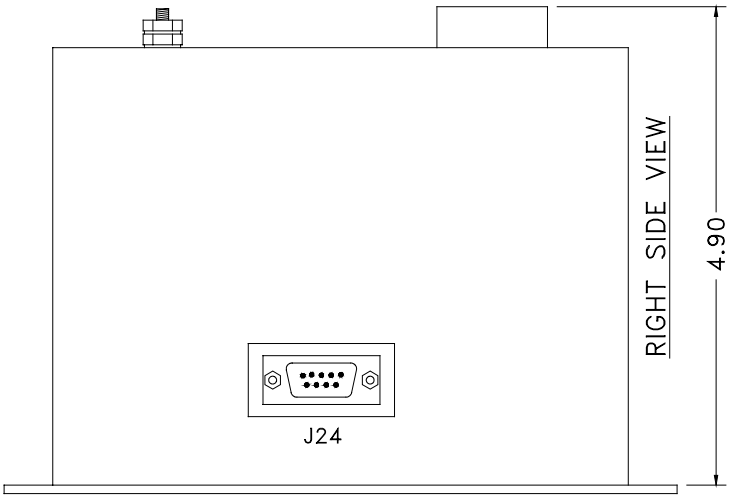

NOTE:
ALL DIMENSIONS ARE IN INCHES.

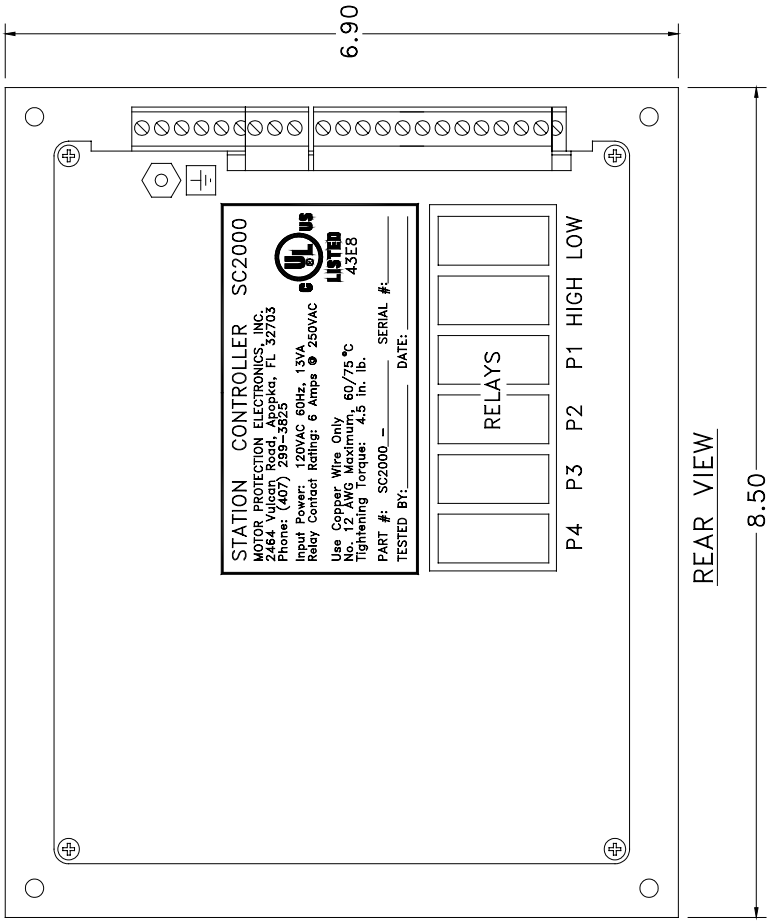

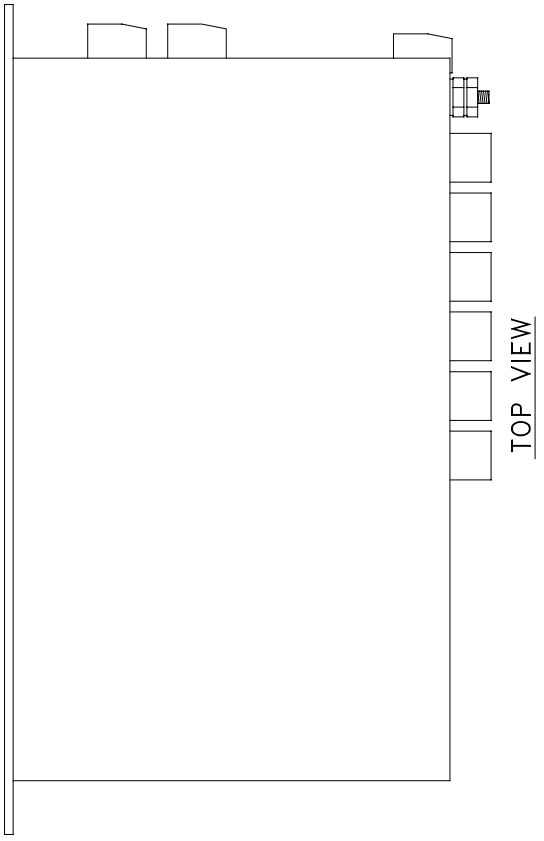
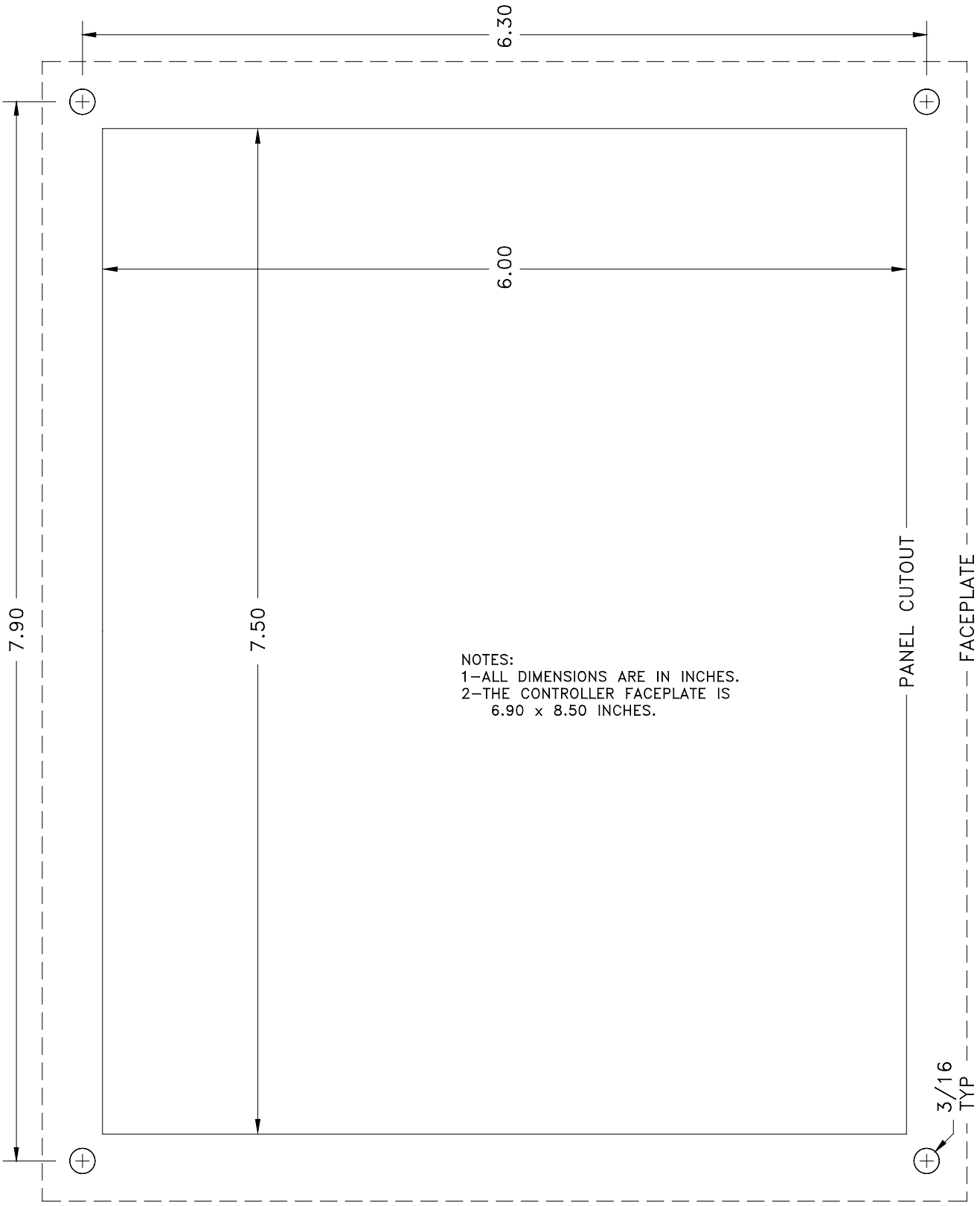
PANEL CUTOUT